CHIAH CHYUN Machinery

T 886-4-2533-7614 E info@chiah-chyun.com

CDS | Double Spindle Double Slant Tool Slides

Two Independent Gang Tool Slides
Double X-Axis Tool Slide
Full "C"-axis on both spindles

- Highly rigid and stable one-piece cast construction allows for the machining of precision parts with maximum accuracy.
- The 6000rpm, 7.5kW built-in spindles feature short acceleration and deceleration times, coupled with low vibration characteristics to provide high precision and highly efficient machining.
- Spindle heads move on two precision linear ways, exhibiting outstanding stability.
- Double X-axis design offers independent work areas on each spindle ensuring the highest production efficiency.
- With the slant design you can save on space, leaving room for more tools. This not only saves tool change time, but also increases machining flexibility.

CE

CDS

Machine Layout

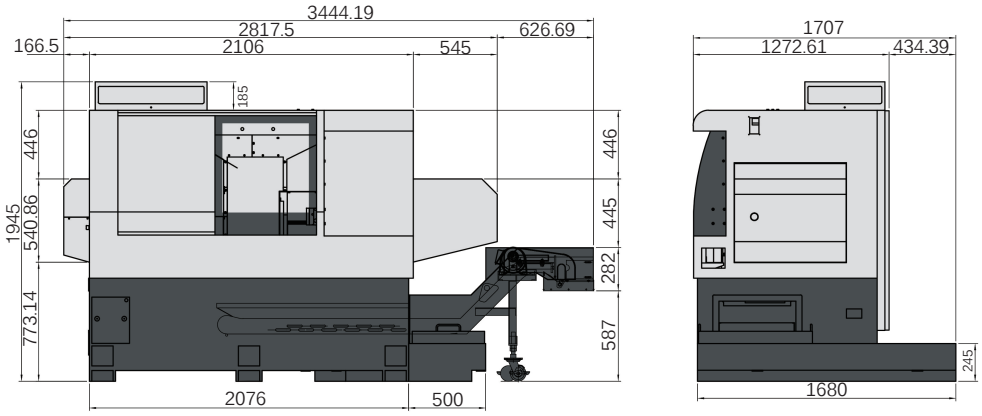

Unit: mm

Specifications

Model		CDS-42	CDS-52
Control Unit	**Controller**	**SYNTEC**	**MITSUBISHI / SYNTEC**
Capacity	Max. Turning Dia.	Ø42mm	Ø51mm
Axes Specifications	X1/ X2-Axes Travel	330 / 330mm	
	Z1/ Z2-Axes Travel	242 / 321mm	232 / 316mm
	X/ Z-Axes Rapid Travel Speed	30m/min	
	X/ Z-Axes Servo Motor	M:1.0kW / 1.0kW S:1.3kW /1.3kW	
	Min. Input Unit	0.001mm	
Main & Sub Spindles	Spindle Max. rpm	6000rpm	
	Spindle Bore	Ø43mm	Ø52mm
	Max. Bar Feeding Dia.	Ø42mm	Ø51mm
	Spindle Nose	A2-5	
	Spindle Collet	TRB-42	TRB-52
	Spindle Servo Motor	5.5 kW / 7.5 kW	7.5 kW / 11kW
	Spindle Center Height	1070mm	
Tooling	O.D. Turning Tool Size	□16mm	
	I.D. Turning Tool Size	Ø20mm	
Power	Voltage stabilizer / transformer	220 V/30 KVA	
	Hydraulic Motor	1HP / 0.75kW	
	Main/Sub Spindle Upper Flush Pump	3 / 4HP	
	Tool Coolant Pump	3 / 4HP	
Tank Capacity	Hydraulic Tank	40L	
	Coolant Tank	315L	
Machine	Machine Size (LxWxH) (includes chip conveyor)	3444.19 x 1707 x 1945mm	
	Machine N.W. (includes chip conveyor)	4500kg	

* Design and specs subject to change without notice.

CHIAH CHYUN Machinery
CHIAH CHYUN MACHINERY CO., LTD.
TEL: +886-4-2533-7614
FAX: +886-4-2532-9524
http://www.chiah-chyun.com
mail: info@chiah-chyun.com