Machinery

CHIAH CHYUN

CHIAH CHYUN MACHINERY CO., LTD.

No. 16, Ln. 52, Sanshe Rd., Shengang Dist., Taichung City 429, Taiwan
TEL: +886-4-2533-7614
FAX: +886-4-2532-9524
E-mail: info@chiah-chyun.com

www.chiah-chyun.com

CE

Machinery

CHIAH CHYUN

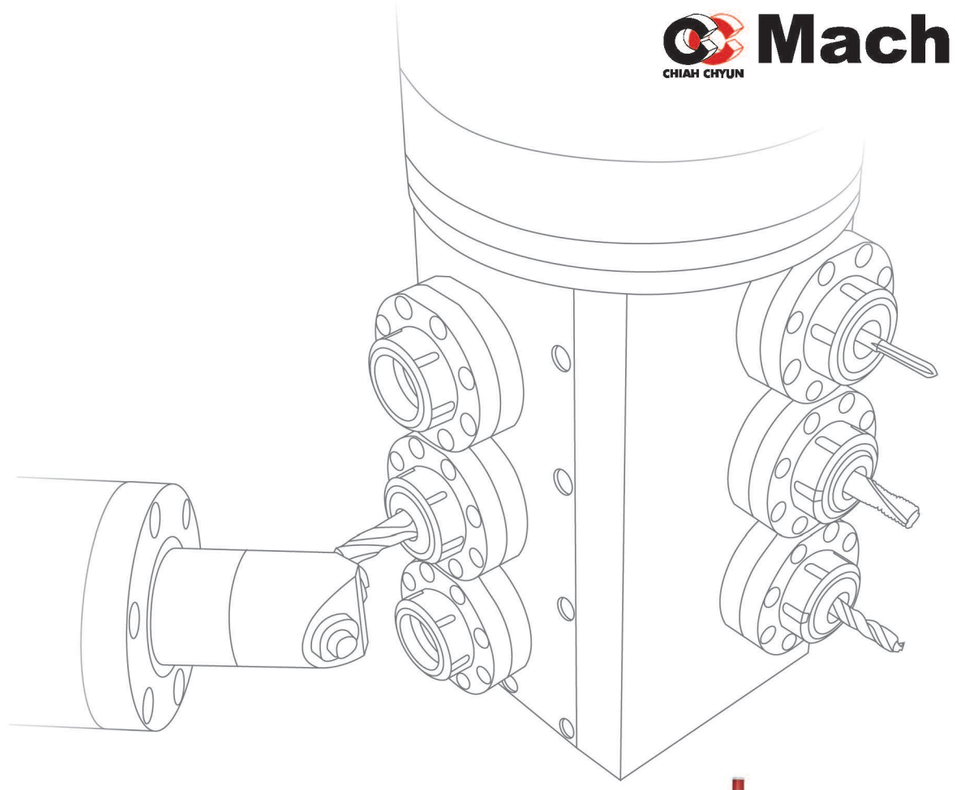

CY2-52MB

CNC TURN & MILL LATHES

Solve your angular machining problem.
+ 360° B Axis Positioning.

CY2-52MB

Single Set Up · Done-in-One

This CY2 will increase your workshop productivity and your machining capabilities

+ For complex parts machining, the CY2 delivers true Turn Mill efficiency completing your parts in a single set-up.
+ With the double Y axis, the B axis machining, and 18 live tools, this machine is the perfect choice for small batch complex components cutting.

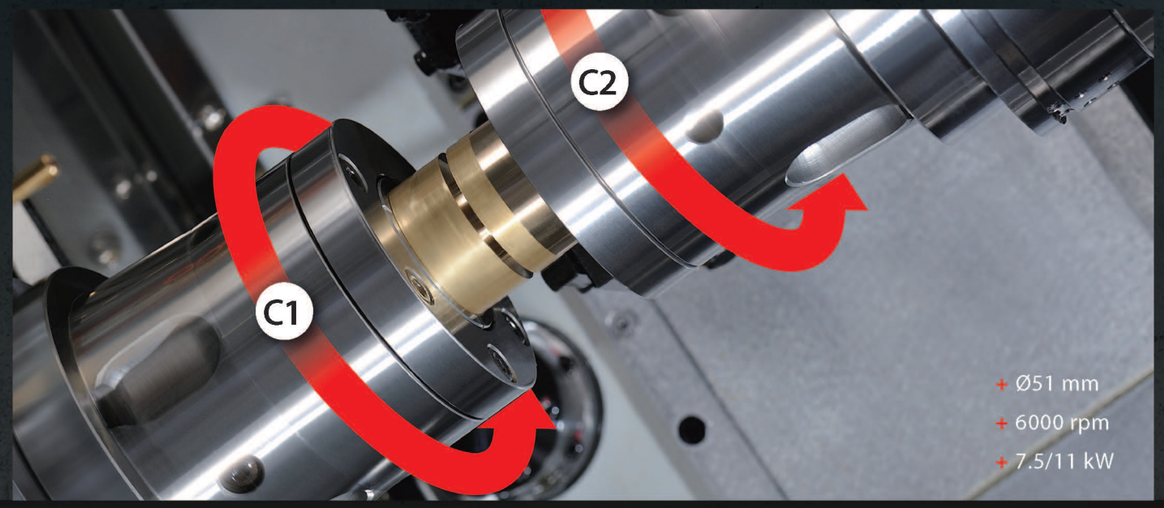

Two Full Size Built-in Spindles

The built-in main and sub spindles feature high torque and high accuracy

+ Built-in spindles suitable high speed machining and both of them have chiller device for eliminating heating issues to reduce the expenditure of maintenance.
+ The CY2 features two spindles of the same size to deliver powerful and efficient cutting on both the front and back of the workpiece.

Applications

+ Aerospace parts
+ Medical parts
+ Hardware accessories
+ Pneumatic and hydraulic parts
+ Sanitary and toilet wares parts

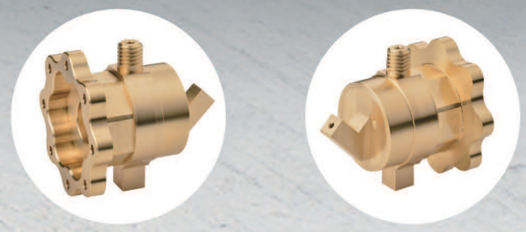

ø49x50 mm
Brass

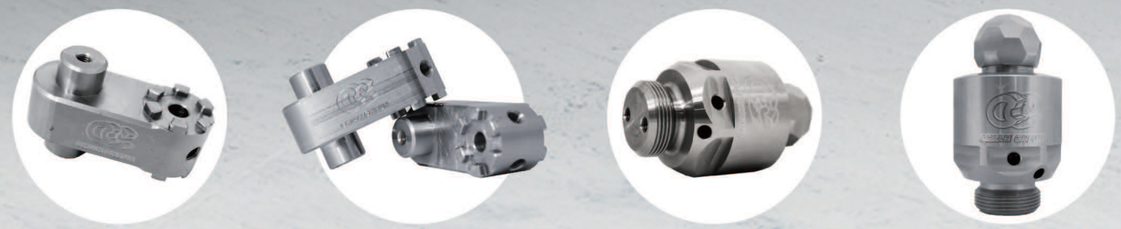

63(L)x40(W) mm
Free cutting steel

ø48x84 mm
Free cutting steel

The Most Suitable Components Ensure The Best Quality

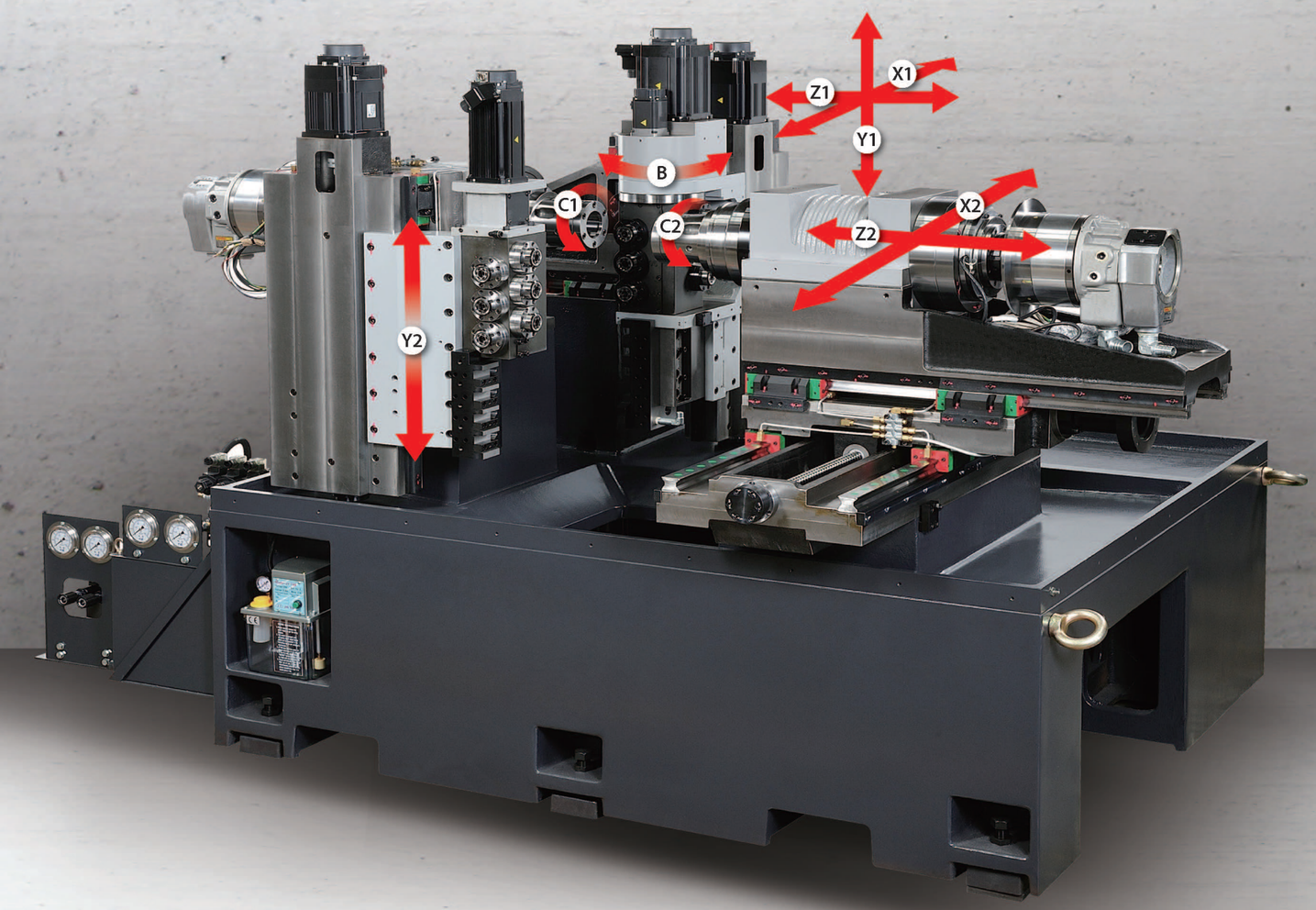

+ **Stronger Casting Support**
All components are mounted on one-piece casting to increase the loading capacity for axial feeding and reduce vibration during cutting.

+ **Reduced Tool Interference**
Flat bed design with front and back gang tool holders removes the space and interference issues.

+ **Excellent Axial Movement**
All axial movements use roller type linear guides, which provide excellent stability and improved machining accuracy.

Double Y Axis for Complex Parts

The CY2 will dramatically cut your machine costs and boost productivity

Double Y axis design can provide equal machining efficiency and perform Y axis machining both on the back and front spindles simultaneously. Enhance cross side milling and fast tool changing options.

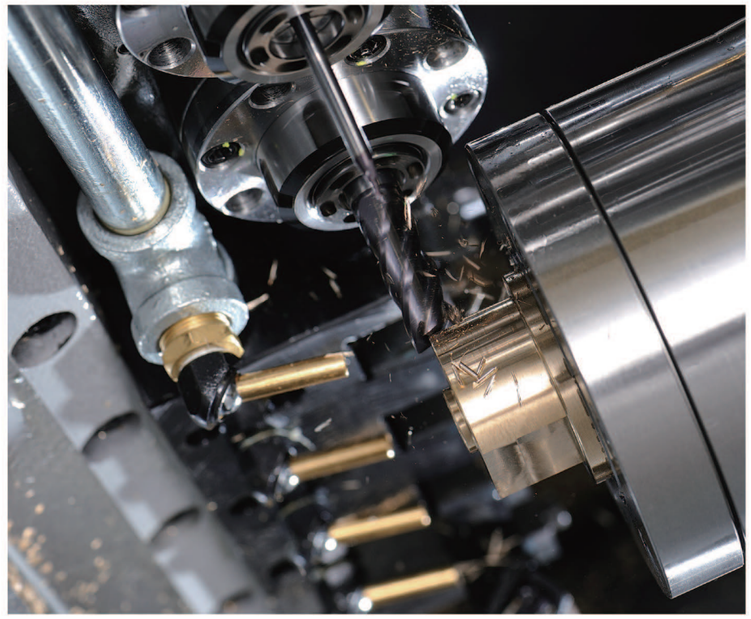

Benefits

+ Reducing Cycle Times
+ No Sharing Required
+ Increased Productivity

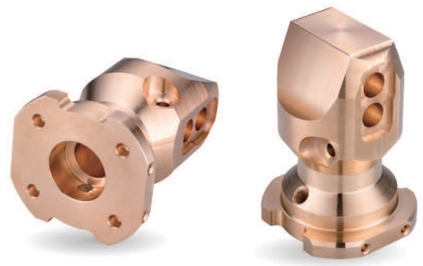

EXCELLENT ANGULAR MACHINING

360° B Axis Positioning Cutting @ Any Angle

+ The B axis functionality is perfect for medical & aerospace components, where high complexity & high precision are key parameters.
+ The B axis with 360° axis positioning can be swivelled to the desired degree, allowing the machine to perform angular drilling, tapping and milling. It lets some of the most complex parts can complete machining in a single set-up.
+ Full 360° B axis rotation and 12 live tools provide maximum machining versatility and easy handling of complex contouring or angled drilling operations.
+ Best of all, the B axis is shareable between the main and sub spindles.

Benefits

+ High Complexity - High Precision
+ Single Cycle Complex Parts
+ B Axis Shareable between Spindles

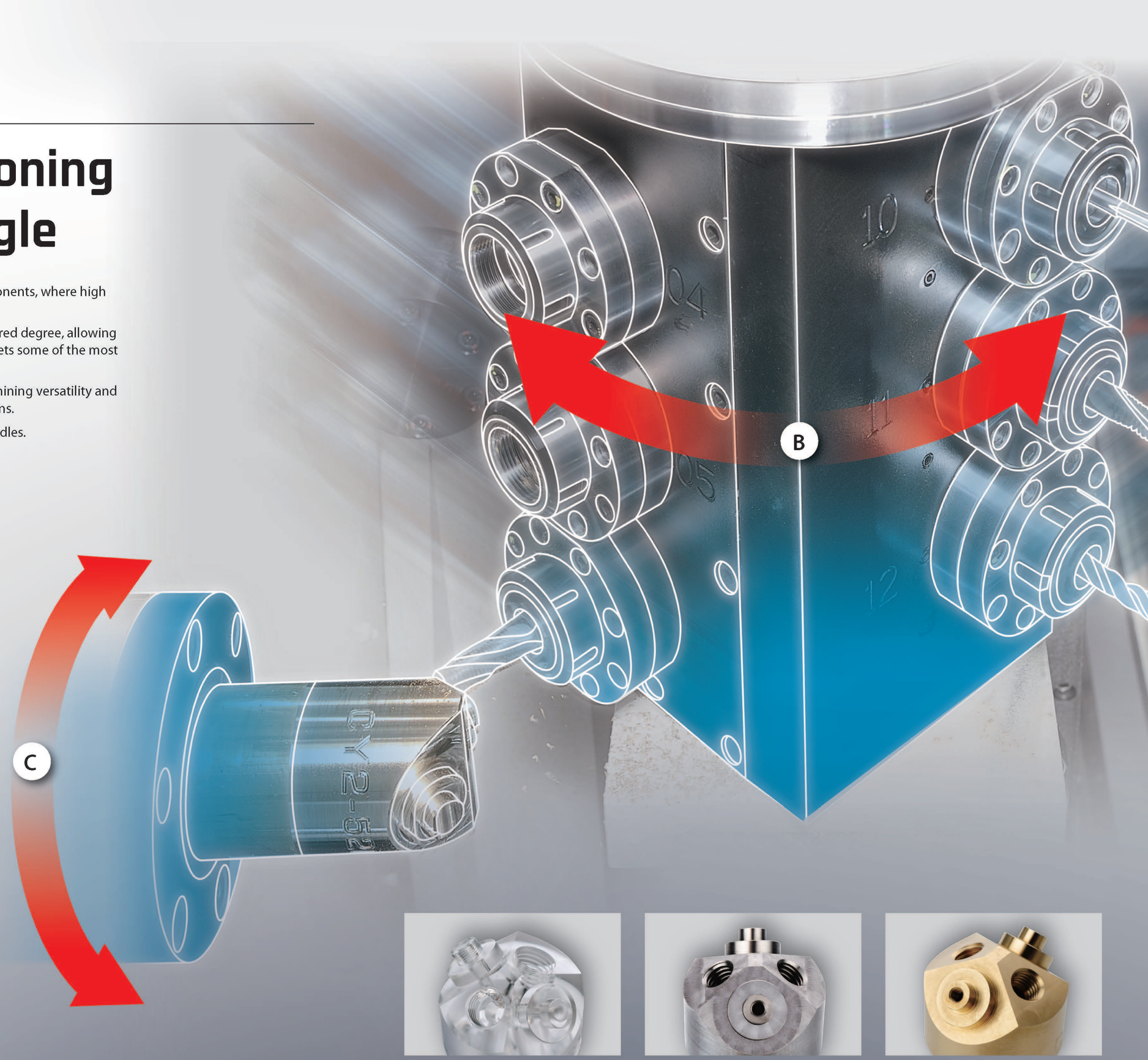

POWERFUL TOOLS

18 Live Tools

Live tooling is the key to your versatility and productivity

The CY2 delivers 12+6 live tools to maximize your machining options.

The large number of available tools allows you to complete a job in one set-up. It also gives you the ability to process multiple complex components without the need to change tools. This increases your productive time and reduces the need for specialized operators to be available for set-ups, easing your scheduling.

Interference Diagram

+ View A

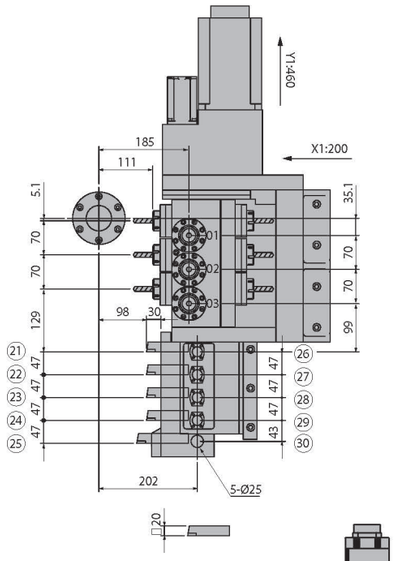

+ View B

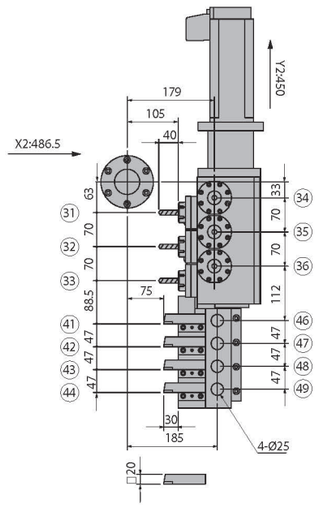

+ View C

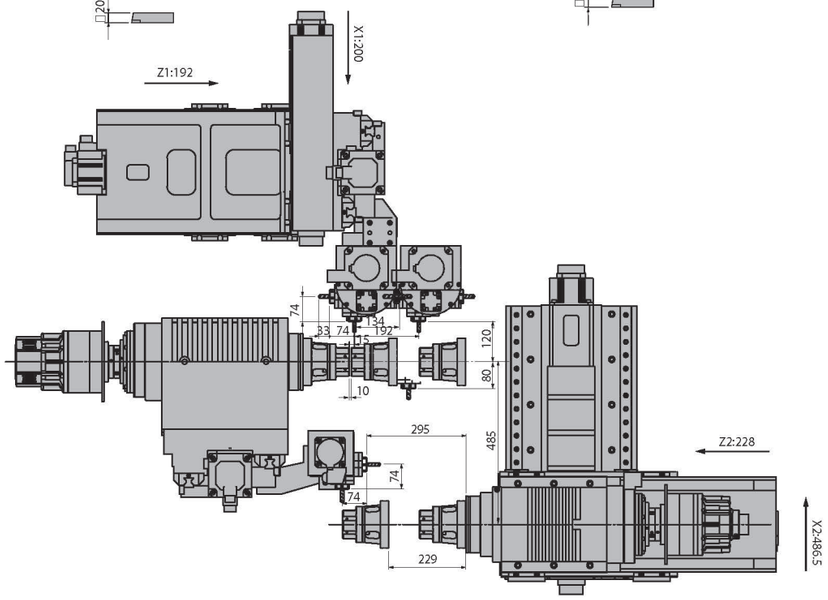

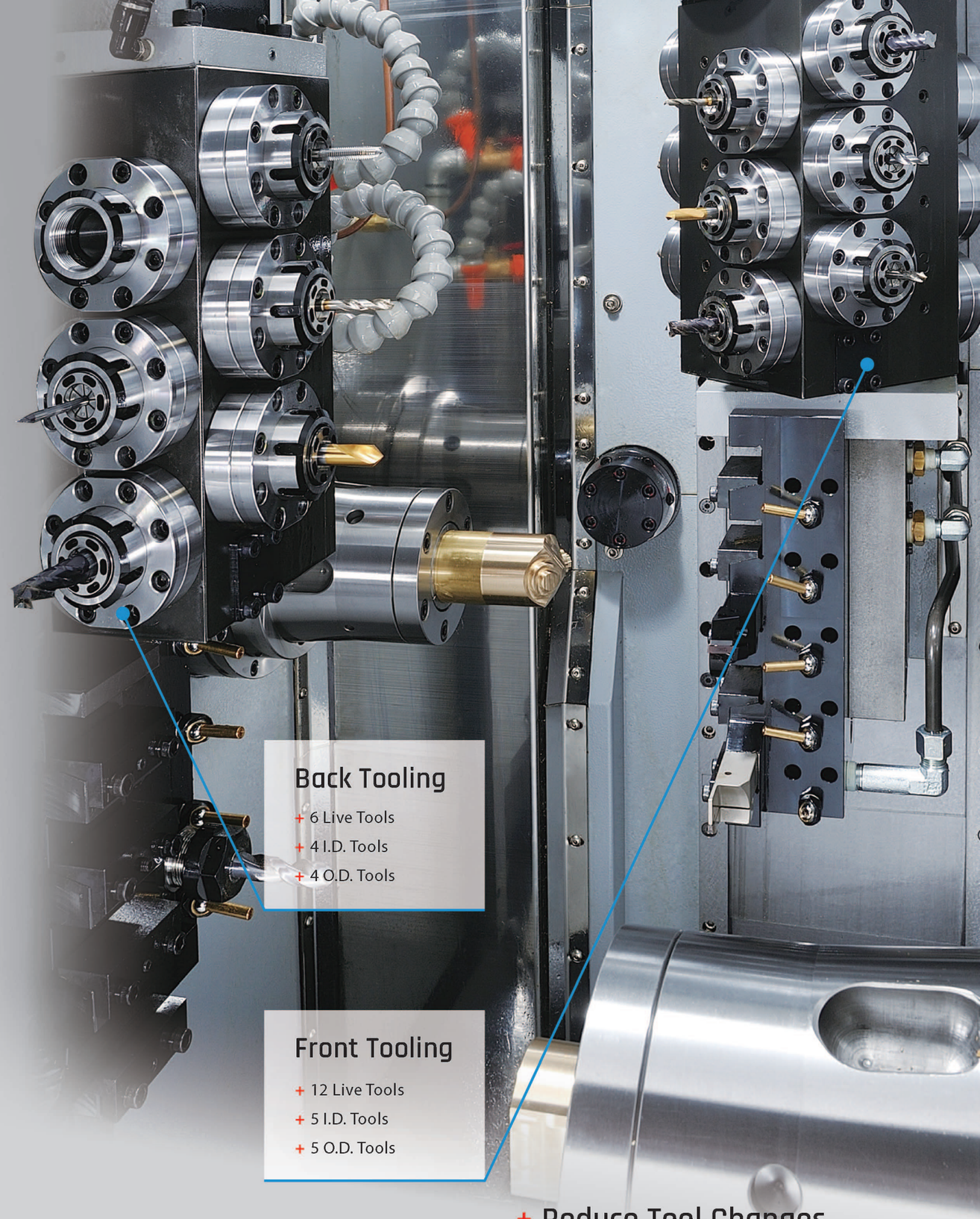

Back Tooling

+ 6 Live Tools
+ 4 I.D. Tools
+ 4 O.D. Tools

Front Tooling

+ 12 Live Tools
+ 5 I.D. Tools
+ 5 O.D. Tools

+ Reduce Tool Changes
+ Reduce Operator Supervision

Machine Specifications

	CY2-52MB
Capacity	
Controller	Mitsubishi
Max. cutting. dia.	Ø51 mm
Max. cutting length	180 mm
Axes Specification	
X1/Y1/Z1-axes travel	200/460/192 mm
X1/Y1/Z1-axes servo motor	1.0 kw / 2.2 kw / 1.5 kW
X1/Y1/Z1-axes rapid traverse	20 m/min
X2/Y2/Z2-axes travel	486.5/450/228 mm
X2/Y2/Z2-axes servo motor	1.0 kw / 2.2kw / 1.0 kW
X2/Y2/Z2-axes rapid traverse	20 m/min
B-axis servo motor	0.4 kW
Min. input unit	0.001 mm
Spindle	
Spindle bore	Ø60.5 mm
Max. bar feeding dia.	Ø51 mm
Max. spindle speed	6000 rpm
Spindle nose	A2-5
Collet of spindle	TRB-52
Spindle servo motor	7.5/11 kW
No. of O.D. turning tool	5 pcs (Op:4 pcs)
O.D. turning tool size	□ 20 mm
No. of I.D. turning tool	5 pcs (Op:4 pcs)
I.D. turning tool size	Ø25 mm
Sub Spindle	
Sub spindle bore	Ø60.5 mm
Max. bar feeding dia.	Ø51 mm
Max. sub spindle speed	6000 rpm
Sub spindle nose	A2-5
Collet of sub spindle	TRB-52
Sub spindle servo motor	7.5/11 kW
No. of O.D. turning tool	4 pcs
O.D. turning tool size	□ 20 mm
No. of I.D. turning tool	4 pcs
I.D. turning tool size	Ø25 mm
Spindle Live Tooling	
No. of radial live tooling	6 pcs (Op:3pcs)
Radial live tooling size	ER-20
Radial live tooling motor	2.2 kW
Max. radial live tooling speed	6000 rpm
No. of axial live tooling	6 pcs (Op:3pcs)
Axial live tooling size	ER-20
Axial live tooling motor	2.2 kW
Max. axial live tooling speed	6000 rpm
Sub Spindle Live Tooling	
No. of radial live tooling	3 pcs
Radial live tooling size	ER-20
Radial live tooling motor	2.2 kW
Max. radial live tooling speed	6000 rpm
No. of axial live tooling	3 pcs
Axial live tooling size	ER-20
Axial live tooling motor	2.2 kW
Max. axial live tooling speed	6000 rpm
Hydraulic & Coolant Motor	
Hydraulic motor	1 HP / 0.75 kW
Main and Sub spindle upper flush pump	1 HP / 0.75 kW
Tool coolant pump	1 HP / 0.75 kW
Sub spindle internal coolant pump	1.4 HP / 1.1 kW
Tank Capacity	
Hydraulic tank	60 L
Coolant tank	280 L
Machine Specification	
Power	220 V/62 kVA
Machine size (LxWxH) (includes chip conveyor)	3726 x 2144 x 2080 mm
Machine N.W.(includes chip conveyor)	6000kg

Standard Accessories

- Tool Kit & Box
- Drilling Shaft ER20
- Tool Sleeve (Ø6, 8, 10, 12, 16, 20)
- Collet Chuck Device
- Auto Bar Feeder Interface
- Finished Parts Catcher & Conveyor
- Spindle Chiller Device
- Coolant through Sub Spindle
- Cutting Fluid Pump
- Cutting Fluid Inspection Device
- Air-Blowing Device
- Auto Power Breaker
- Finished Parts Ejector
- Air-conditioner for Electrical Cabinet
- Steel Belt Chip Conveyor

Optional Accessories

- Voltage Stabilizer
- Oil Skimmer
- Oil Mist Collector
- High Pressure Coolant Device
- Bar Feeder
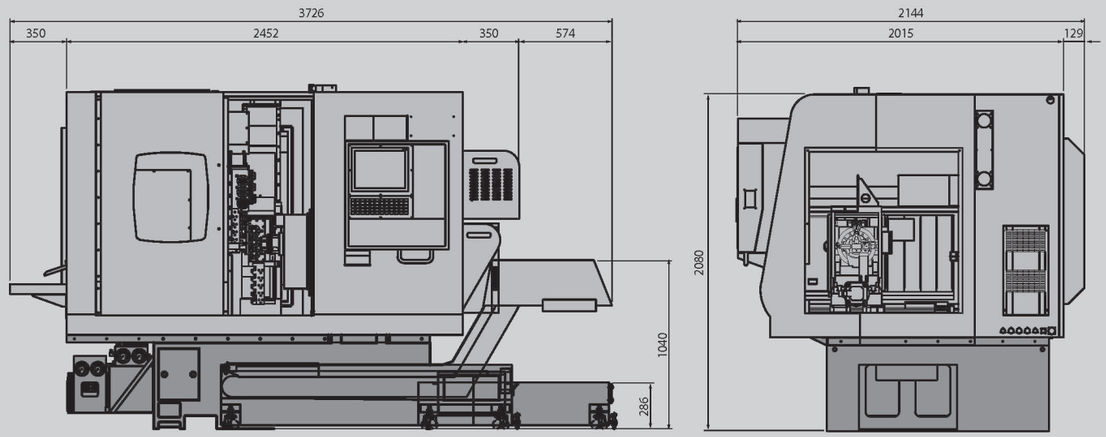
Machine Dimensions