Machinery
CHIAH CHYUN

SY2-20B

SWISS TYPE CNC LATHE

Double built-in spindle. Removable guide bush.
Maximum 30 tool position & Y2 axis.

Machinery
CHIAH CHYUN

洽群機械股份有限公司
CHIAH CHYUN MACHINERY CO., LTD.
No. 16, Ln. 52, Sanshe Rd., Shengang Dist., Taichung City 429, Taiwan
42944台中市神岡區三社路52巷16號
E-mail: info@chiah-chyun.com
TEL: +886-4-2533-7614
FAX: +886-4-2532-9524

SY2-20B AR 3D展示

www.chiah-chyun.com

SY2-20B

Comprehensive To Meet Your Needs

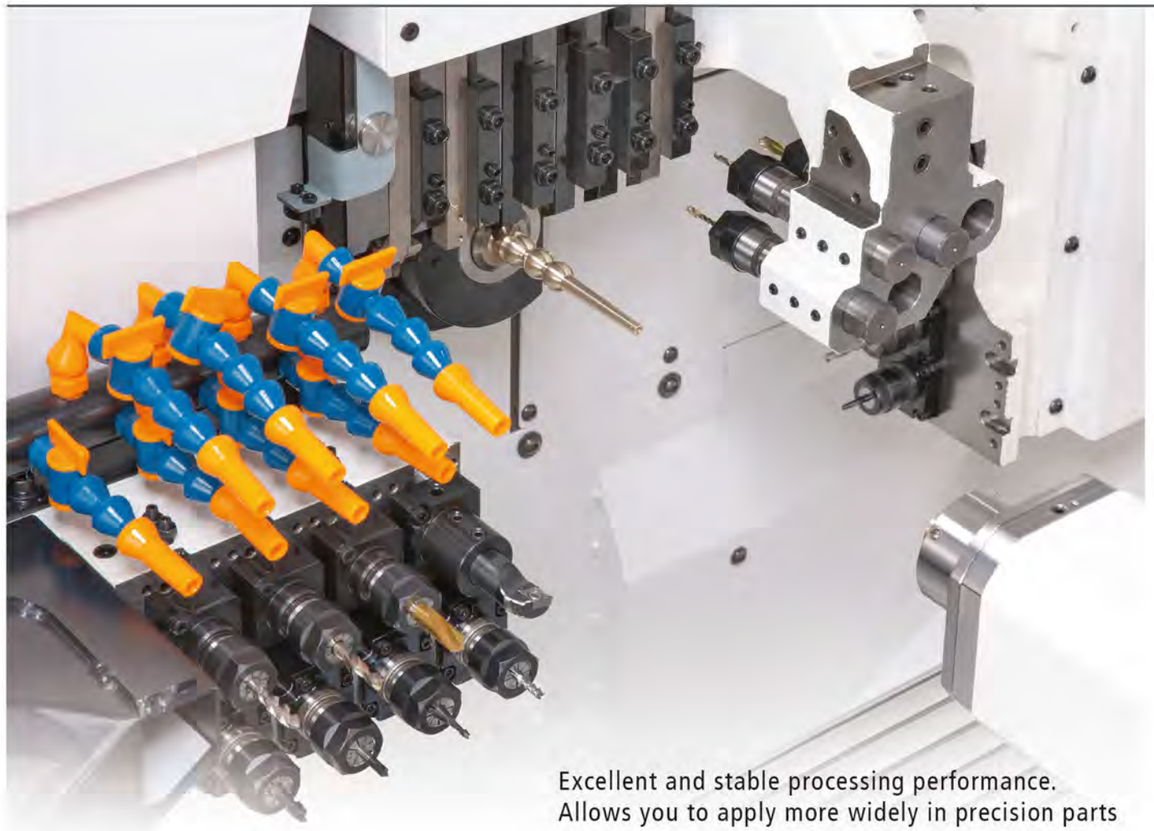

Excellent and stable processing performance.
Allows you to apply more widely in precision parts processing.

+ Double built-in spindles with high accuracy C axis, max. speed 10000 rpm.
+ The large number of available tools increases your productive time, efficiency to process turning, milling, drilling and back machining.
+ Front tooling system provides 6 O.D. tools, 5 I.D. tools and 3 radial live tools plus 2 expansion adapter live tool units.
+ Back tooling system on Y2 axis can have a max. of 8 live tools, also provide two deep drilling holders beside the sub spindle.

High Rigidity Construction And Design

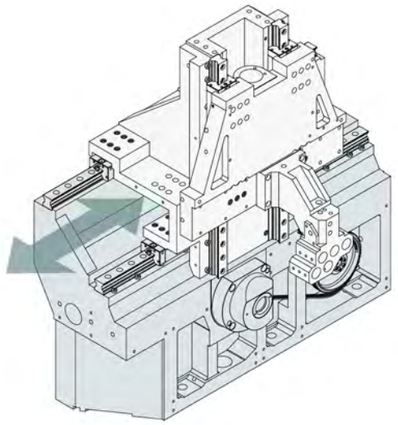

Excellent Machining Accuracy

All axes use two precision roller type linear guides to achieve high stabitily movement and accuracy machining.

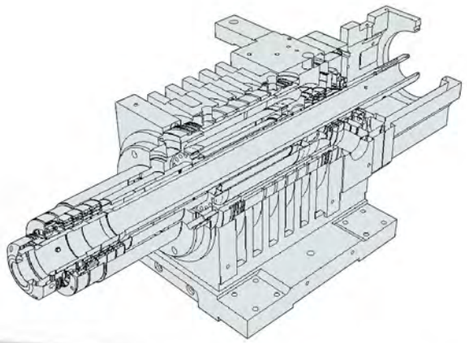

Built-in spindle motor reduces machining errors

Main and sub-spindle adopt precision built-in motors, which accelerates quickly, torques greatly, reduces processing vibration, and has a maximum speed of 10,000 rpm.

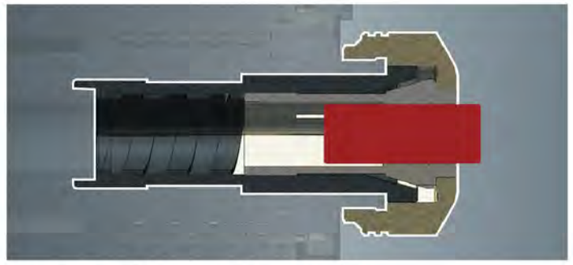

Removable guide bush

The material can be closer to the processing position to minimize the leagth of remant and reduce costs.

Without guide bush

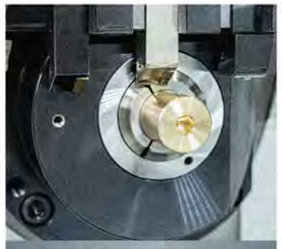

With guide bush

Activity guide set

The guide sleeve and spindle rotate synchronously. Provide stable support while achieving higher machining accuracy and greatly reducing material wear.

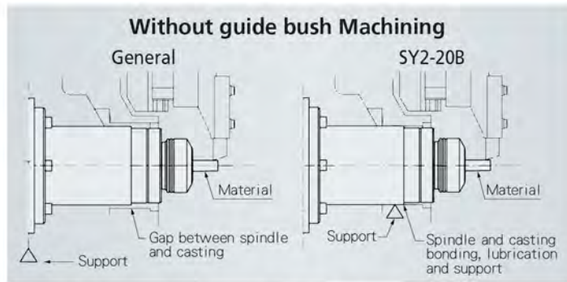

High Rigidity machine structure

Unique designed support from a highly rigid body to ease cutting vibration and increase machining stability.

Application industry

+ Pneumatic / hydraulic components
+ Automotive, motorcycle and bicycle parts
+ Sanitary and toilet parts
+ Electronic and electrical parts
+ Hardware accessories
+ Instrument parts

Processing Variation Performance

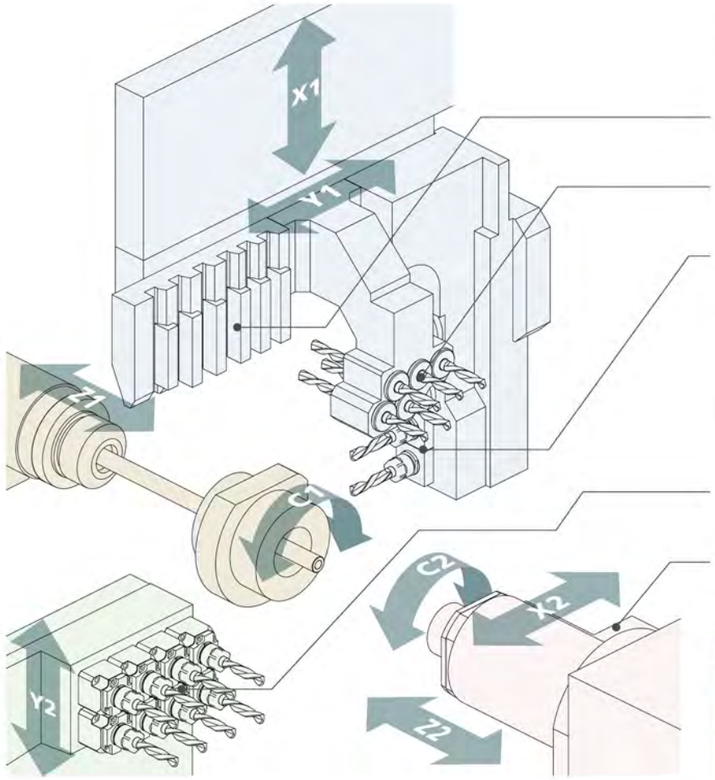

Front tooling system

+ O.D tools □12mm*6
+ I.D tools Ø22*5 (ER-16*3、ER-20*2)
+ Radial live tool system*5
  (live tool holder*3 / expandable live tool holder*2)

Back tooling system

+ Axial live tool system*8
+ Deep drilling holder station*2

Main and sub simultaneous drilling

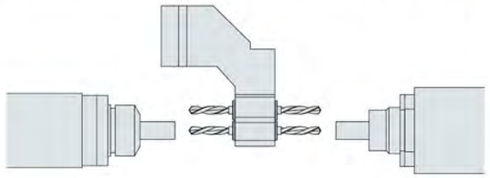

Main and sub-spindle overlap drilling

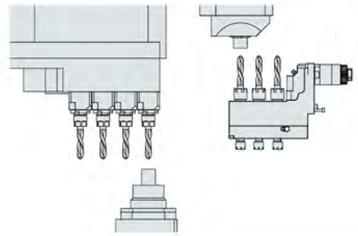

Cross-drilling at back side

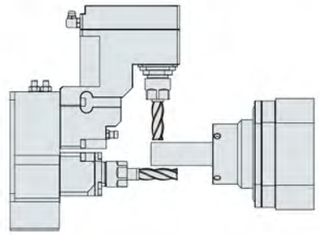

Angle Live Tool

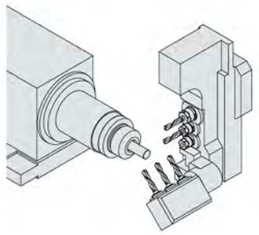

Thread Whirling tool holder

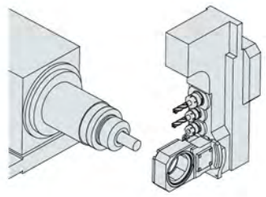

Variations

+ Power tools

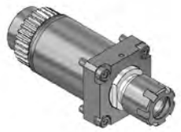

+ 1-to-3 end-face power unit

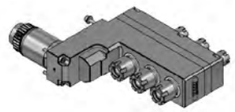

+ End-face power unit

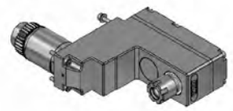

+ Thread Whirling tool holder

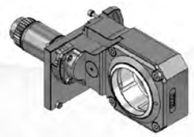

+ Polygonal tool holder

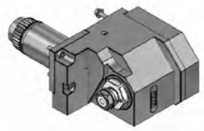

+ Slot milling tool holder

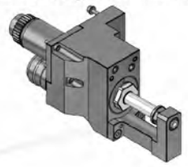

Cut off inspection

By morning axis and deteeting motor curreut after part of,avoid crash by following tools and ensure part is secure in correct position.

SY2-20B Dimensions And Accessories

Tool Interference Diagram

View A

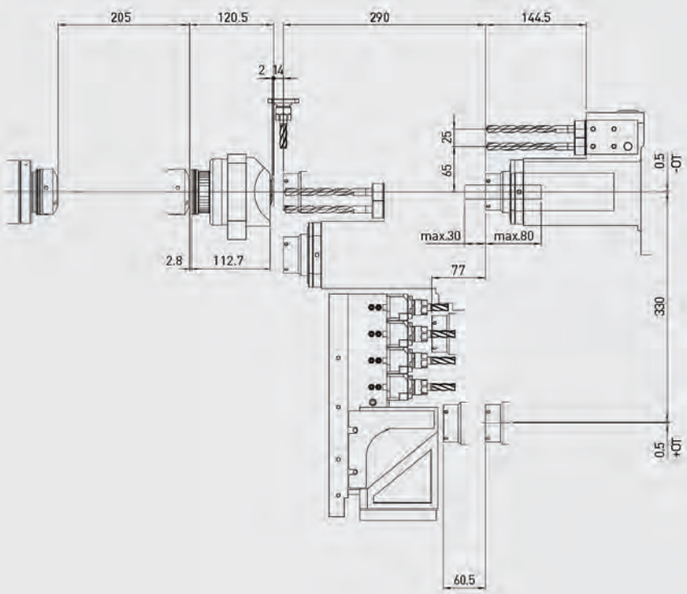

View B

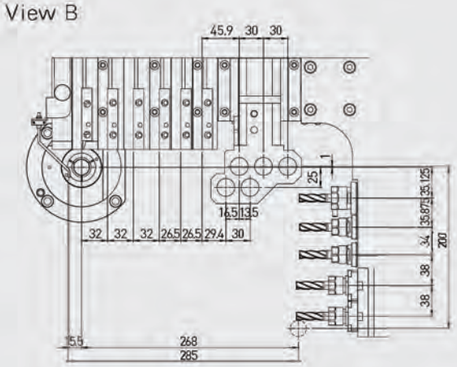

View C

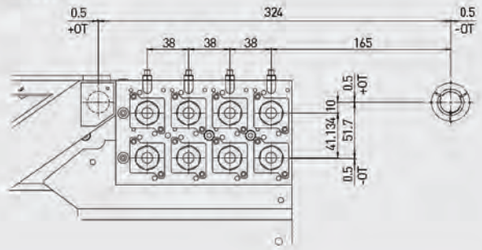

Machine Dimensions

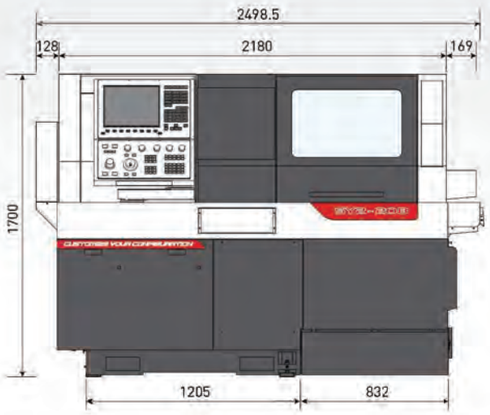

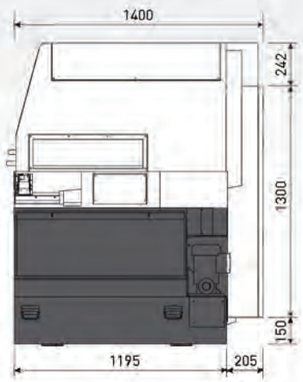

Machine Specifications

Capacity			
Controller	Syntec	Mitsubishi	Fanuc
Axes Specification			
Max. cutting diameter (rotary Bush / Bushless)	Ø20 mm / Ø23 mm		
Max. cutting length pur chuck (rotary Bush / Bushless)	200 mm / 50 mm		
X1 / Y1 / Z1 axis travel	200 / 285 / 205 mm		
X2 / Z2 / Y2 axis travel	330 / 290 / 51.5 mm		
X1 / Z1 / Y1 rapid travese	30 m/min		
X2 / Z2 / Y2 rapid travese	30 / 30 / 5 m/min		
Min. input unit	0.001 mm		
Spindle			
Max. of spindle speed	10000 rpm		
Collet of spindle	ST20		
Size of guide bush	SR20		
C-axis index positioning	0.001°		
Spindle motor	5.5 kw	3.7 kw	3.7 kw
Spindle type	Built-in spindle		
No. / size of O.D. tools	6 / □12		
No. / size of I.D. tools	5 / Ø22		
Max. number of revolutions of the driven tool	8000 rpm		
Power tool motor	2.5 kw	2.2 kw	2.2 kw
No. / size of radial live tools	3/ER-20*1 , ER-16*2		
No. / size of axial live tools	Optional 3 / ER-16		
Sub-Spindle			
Max. number of revolutions of the sub-spindle	10000 rpm		
Collet of spindle	ST20		
C-axis index positioning	0.001°		
Sub-spindle motor	5.5 kw	3.7 kw	3.7 kw
Spindle type	Built-in spindle		
The max. number of revolutions of the back tool	8000rpm		
Sub-spindle power tool motor	1 kw	0.75kw	1 kw
The number of end face live tool	St 4 / Op 4		
End face tool size	Ø22		
Number / size of deep hole tool holder	2 / Ø22		
Electricity			
Voltage regulators / transformers	30 KVA		
Coolant pump	1.6 HP		
Machine Specifications			
Main / sub-spindle motor cooling system	Oil-cirulation cooling		
Main / Sub spindle clamping system	Pneumatic jaw		
Lub. tank capacity	2 L		
Coolant tank capacity	200 L		
Machine size (L x W x H)	2498 x 1400 x 1700 mm		
Machine N.W. (without chip conveyor)	3200 kg		
Air pressure requirment	0.6 Bar		

Standard Accessories

+ Tool Kit & Box
+ Rotary Guide Bush
+ Main Spindle-Radial Live Tool Holder (3 sets)
+ Sub spindle-live tool Holder
+ Heat exchanger for Electrical Cabinet
+ Auto Bar Feeder Interface
+ Auto Power Breaker
+ Sub Spindle Air Through & Part Ejector
+ Finished Part Catcher & Part Conveyor
+ Main & Sub Spindle External Air Blowing Device
+ Main&Sub Spindle Pneumatic Clamping System
+ Cutting Fluid Pump
+ Cutting Fluid Inspection Derice
+ Spindle Chiller

Optional Accessories

+ CE Marking
+ Oil Mist Extractor
+ Voltage Stabilizer / Transformer
+ Chip Conveyors
+ Auto Bar Feeder
+ High Pressure Coolant Device
+ Cutting Liquid Coolant Chiller Device
+ Chip Breaking Technology (Syntec)